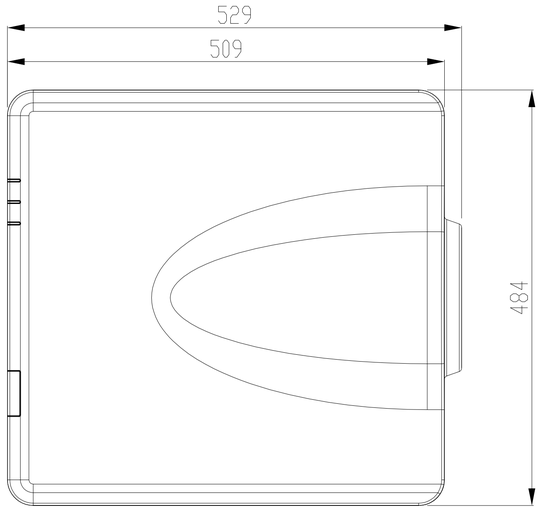

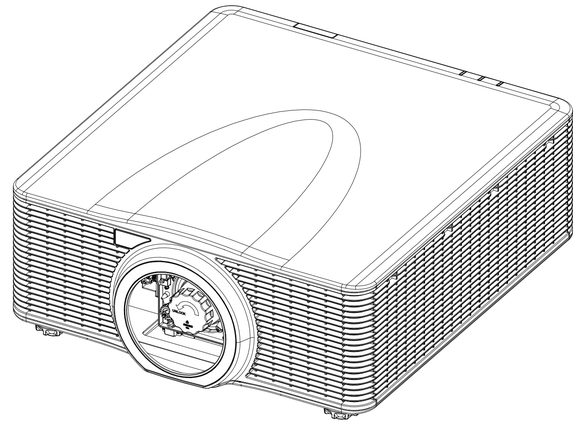

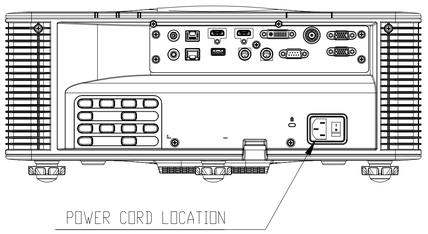

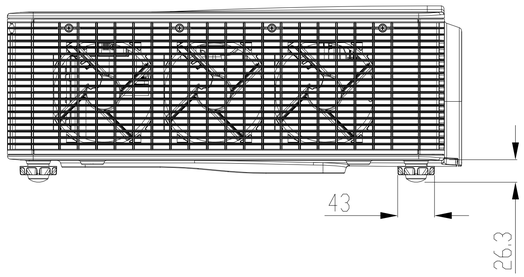

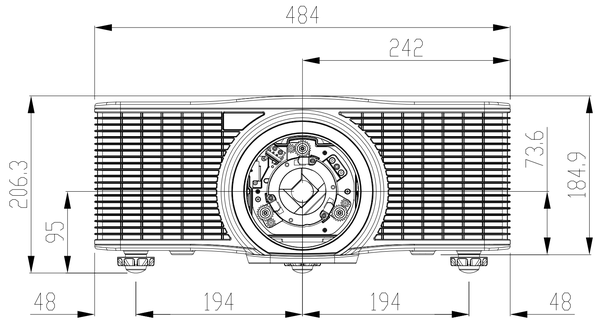

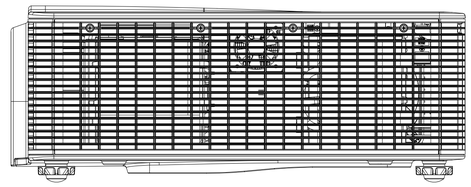

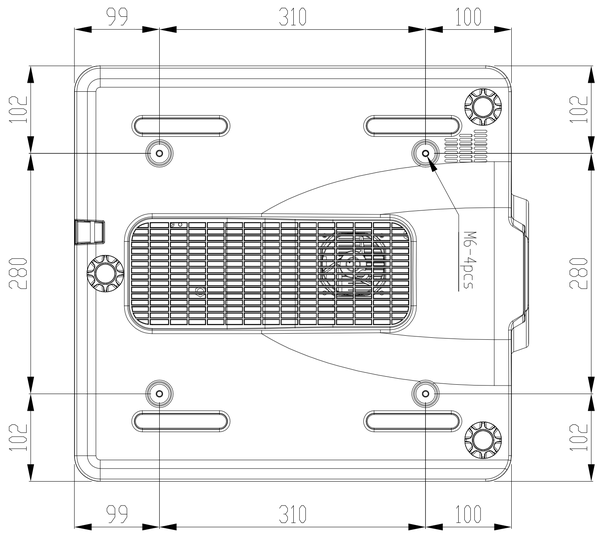

GENERAL NOTE
1.MASS: 17.6 Kg(No Lens)
2.OPERATING TEMPERATURE RANGE:
5°C~40°C @ 0~2500FT
5°C~35°C @ 2500~5000FT
5°C~30°C @ 5000~10000FT
3.INPUT: AC 100-240V~,50/60Hz,7.0A

Rev.	Initator	Date	Description	ECR NO.
A	Strife	20200707	FORMAL RELEASE	X

LIMITS UNLESS OTHERWISE NOTED

1-6	±0.1	300-1000	±1.0
6-30	±0.2	1000-2000	±1.5
30-100	±0.3	2000-	±2.0
100-300	±0.5	ANGLE	±0.5°

DRAWN	Strife Chu	20200707
ENG.	Strife Chu	20200707
CHK.	Sun Chen	20200707
APPD.	Sun Chen	20200707

Coretronic Corporation

NAME :
UNIT OUTLINE INFORMATION

TITLE	PART NO.	Rev.
ZU860		A

SCALE	UNIT	MATERIAL	FINISH	SHEET
1:1	mm			A1 1 OF 4

Part Name:

L04-3016f1 Rev.C

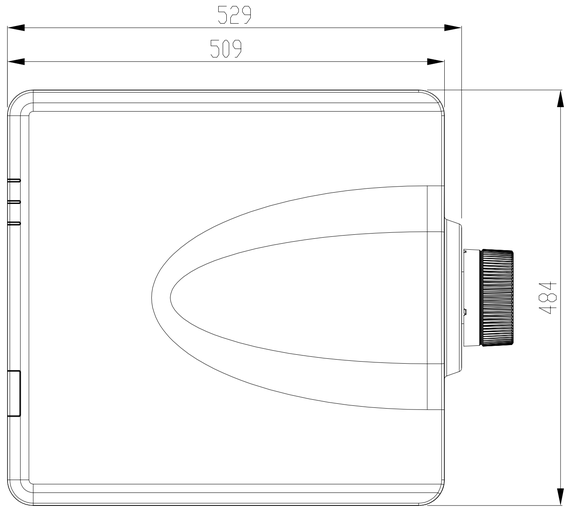

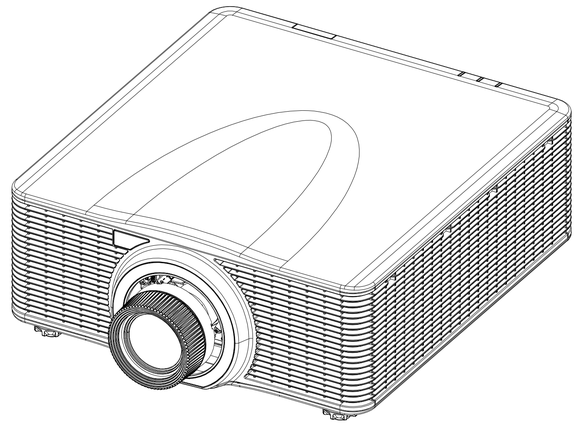

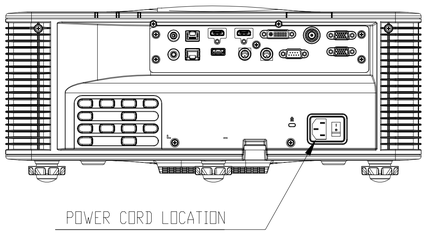

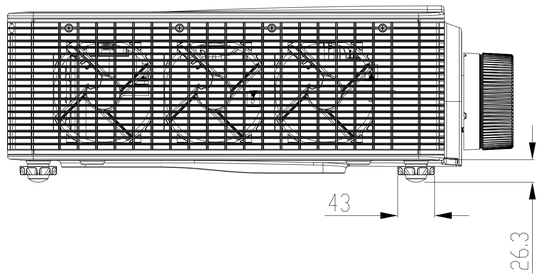

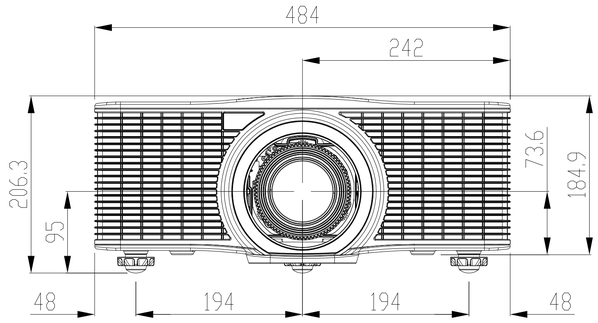

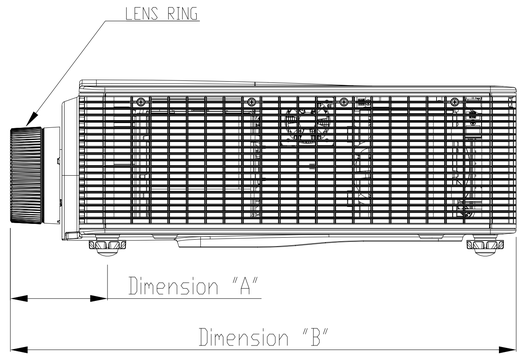

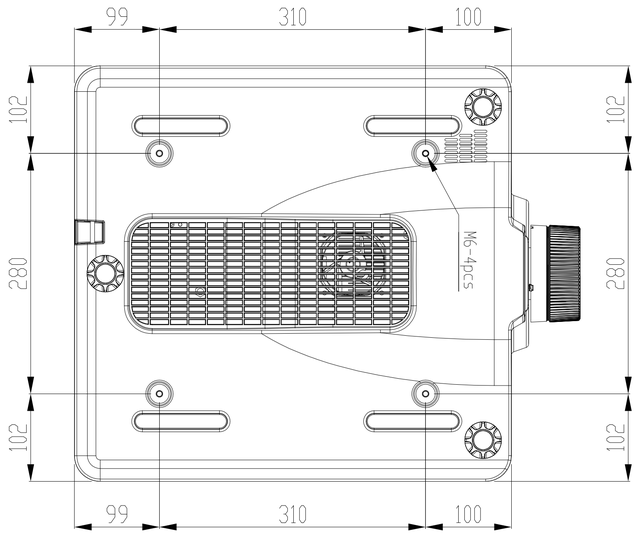

DESCRIPTION	DIMENSION A	DIMENSION B	LENS WIDTH	LENS RING
Standard Lens A06(TR:1.22~1.52)	113.86	589.87	Ø89	YES
Optional Lens A15(TR:0.75~0.95)	101.92	577.92	Ø104	YES
Optional Lens A16(TR:0.36)	348.47	824.47	250	N/A
Optional Lens A17(TR:0.65~0.75)	136.01	612.01	Ø146	N/A
Optional Lens A01(TR:0.95~1.22)	94.56	570.57	Ø86	YES
Optional Lens A03(TR:1.52~2.92)	114.36	590.37	Ø86	YES
Optional Lens A13(TR:2.9~5.5)	142.07	618.07	Ø86	YES

GENERAL NOTE
1.MASS: 17.6 Kg(No Lens)
2.OPERATING TEMPERATURE RANGE:
5°C~40°C @ 0~2500FT
5°C~35°C @ 2500~5000FT
5°C~30°C @ 5000~10000FT
3.INPUT: AC 100-240V~,50/60Hz,7.0A

Rev.	Initator	Date	Description	ECR NO.
A	Strife	20200707	FORMAL RELEASE	X

LIMITS UNLESS OTHERWISE NOTED

1-6	±0.1	300-1000	±0.45
6-30	±0.1	1000-2000	±0.6
30-100	±0.2	2000-	±0.8
100-300	±0.3	ANGLE	±0.5°

DRAWN	Strife Chu	20200707
ENG.	Strife Chu	20200707
CHK.	Sun Chen	20200707
APPD.	Sun Chen	20200707

Coretronic Corporation

NAME :
UNIT OUTLINE INFORMATION

TITLE	PART NO.	Rev.
ZU860		A

SCALE	UNIT	MATERIAL	FINISH	SHEET
1:1	mm			A1 2 OF 4

Part Name:

L04-3016f1 Rev.C

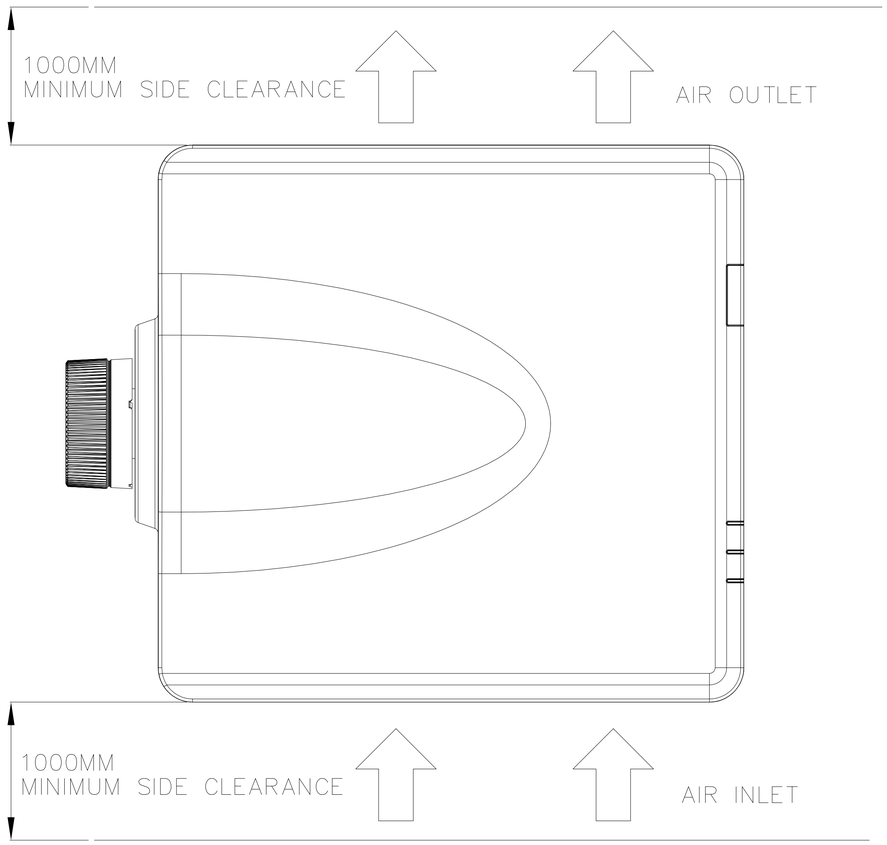

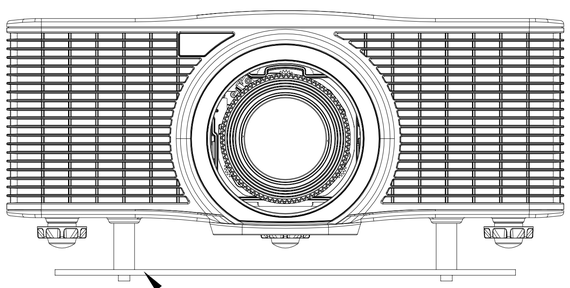

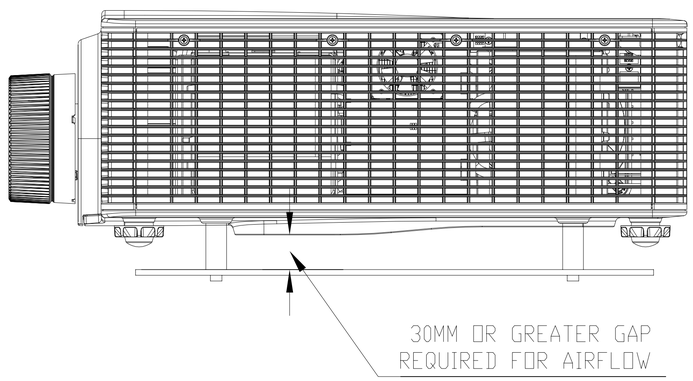

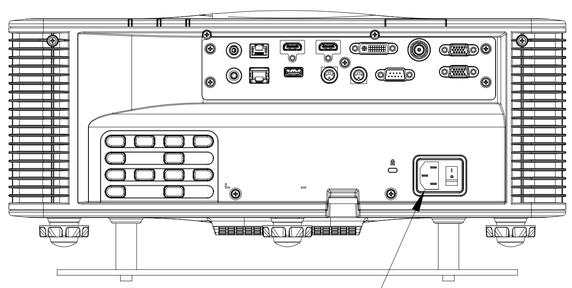

Rev.	Initator	Date	Description	ECR NO.
A	Strife	20200707	FORMAL RELEASE	X

LIMITS UNLESS OTHERWISE NOTED

1-6	±0.1	300-1000	±0.8
6-30	±0.2	1000-2000	±1.2
30-100	±0.3	2000-	±2.0
100-300	±0.5	ANGLE	±0.5°

DRAWN	Strife Chu	20200707
ENG.	Strife Chu	20200707
CHK.	Sun Chen	20200707
APPD.	Sun Chen	20200707
TITLE	ZU860	
SCALE	UNIT	MATERIAL
1.000	mm	

Coretronic Corporation

NAME : AIRFLOW MINIMUM GAP/CLEARANCE

PART NO. | Rev.A

FINISH | A1 | SHEET 3 OF 4

Part Name: Ver: Drawing Name:

L04-3016F1 Rev.C

TR 0.36 WIDE ZOOM (A16)

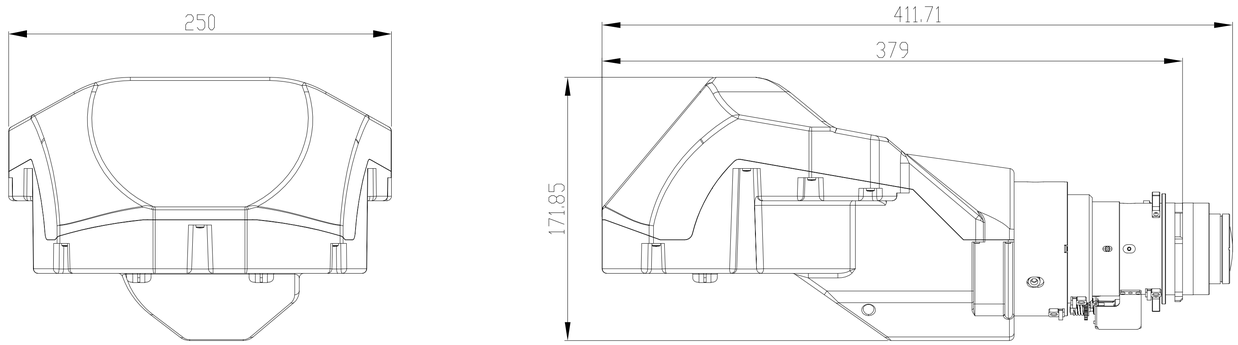

TR 1.22 - 1.52 STANDARD ZOOM (A06)

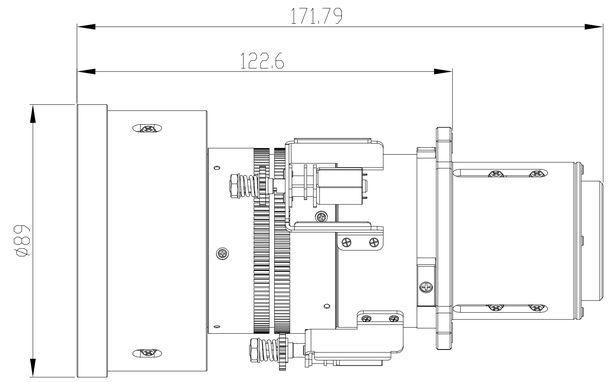

TR 1.22 - 1.53 STANDARD ZOOM (A02) for ZU660

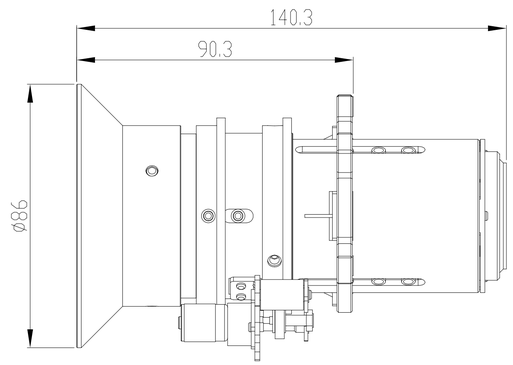

TR 0.75 - 0.95 WIDE ZOOM (A15)

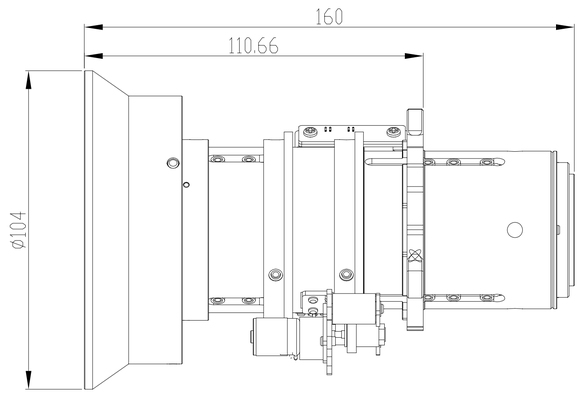

TR 1.52 - 2.92 LONG ZOOM (A03)

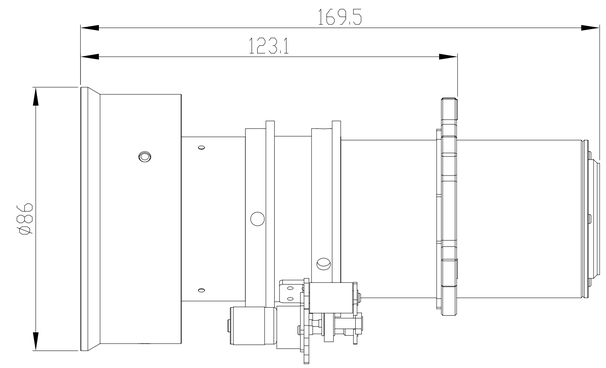

TR 0.65 - 0.75 WIDE ZOOM (A17)

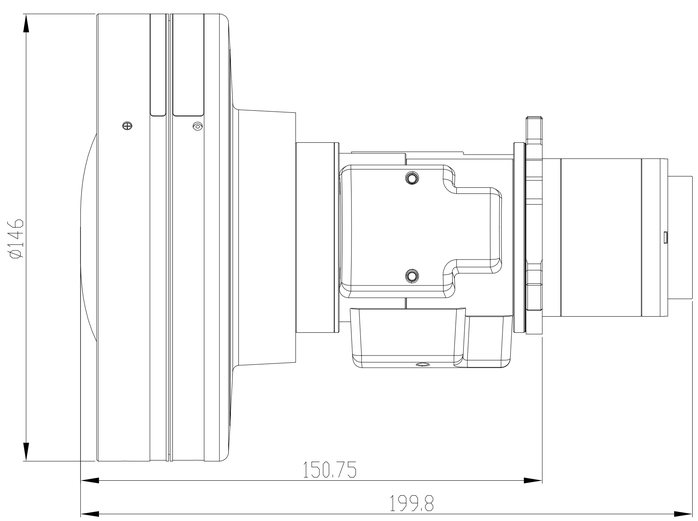

TR 0.95 - 1.22 WIDE ZOOM (A01)

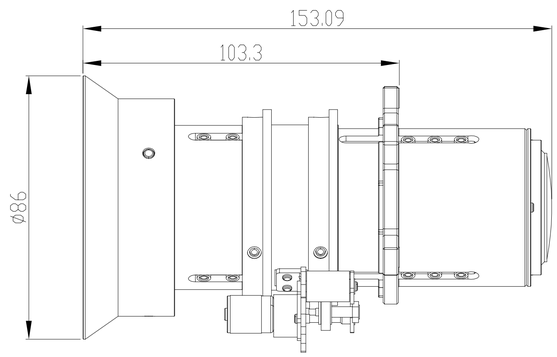

TR 2.90 - 5.50 LONG ZOOM (A13)

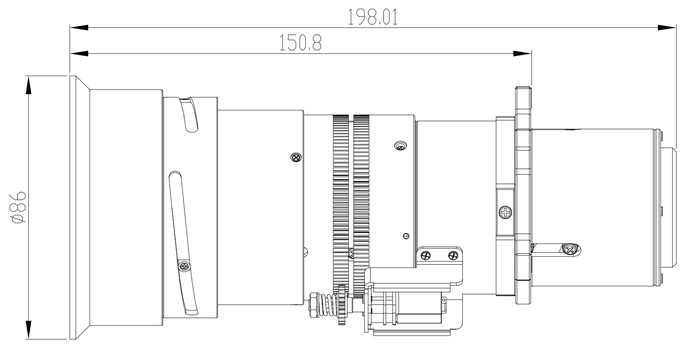

DESCRIPTION	GROSS WEIGHT	NET WEIGHT
Optional Lens A16 (TR: 0.36)	7.95 kg	2.7 kg
Optional Lens A17 (TR: 0.65~0.75)	1.8 kg	1.17 kg
Optional Lens A15 (TR: 0.75~0.95)	1.18 kg	0.7 kg
Optional Lens A01 (TR: 0.95~1.22)	0.9 kg	0.6 kg
Standard Lens A02 (TR: 1.22~1.53) for ZU660	0.8 kg	0.5 kg
Standard Lens A06 (TR: 1.22~1.52)	1.32 kg	0.9 kg
Optional Lens A03 (TR: 1.52~2.92)	1.16 kg	0.8 kg
Optional Lens A13 (TR: 2.90~5.50)	1.4 kg	1.0 kg

Rev.	Initator	Date	Description	ECR NO.
A	Strife	20200707	FORMAL RELEASE	

LIMITS UNLESS OTHERWISE NOTED			
1~6	±0.1	300~1000	±0.8
6~30	±0.2	1000~2000	±1.2
30~100	±0.3	2000~	±2.0
100~300	±0.5	ANGLE	±0.5°

DRAWN	Strife Chu	20200707
ENG.	Strife Chu	20200707
CHK.	Sun Chen	20200707
APPD.	Sun Chen	20200707

Coretronic Corporation

NAME : COMPATIBLE LENS

TITLE

PART NO.

Rev.A

SCALE	UNIT	MATERIAL	FINISH	SHEET
1:1	mm			4 OF 4

A1

Part Name: Ver: / Drawing Name:

L04-3016F1 Rev.C